Sankyo

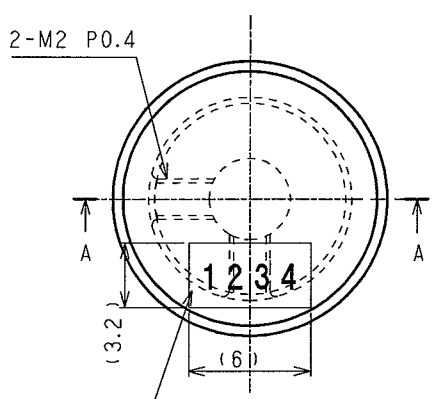

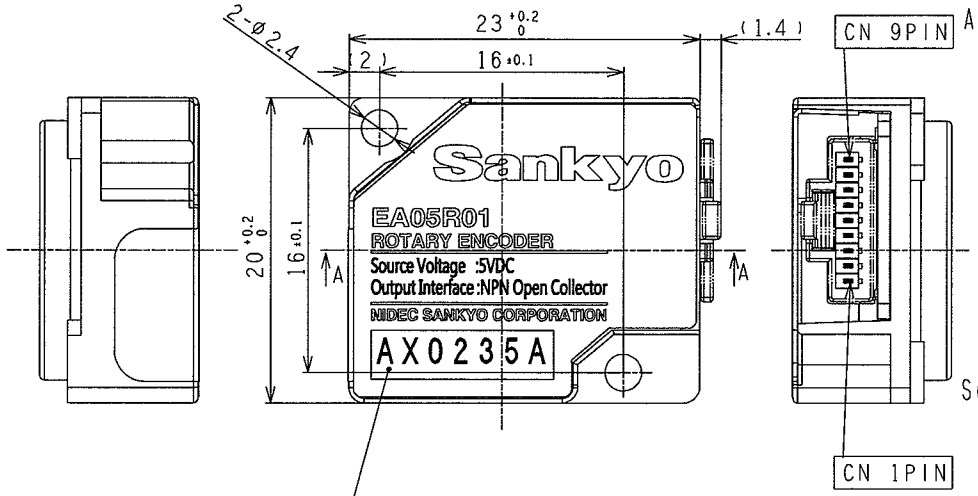

■Serial No Area
·Printed by HANDWRITE or SIGNET

●Serial No
0000~9999

■Serial No. Entry Blank
·Printed by Hot Transcript

■Serial No. Note Tool
·Example:2008.OCT No.235 Rev.A
·Write=AX0235A

■Symbol Rule
·Year→Month→Serial No.→Revision No.

■Rule Detail
★Year
A=2008, B=2009, , E=2012
★Month
1=JAN, 2=FEB, , 9=SEP
X=OCT, Y=NOV, Z=DEC
★Serial No.
0000~9999
★Revision Status Symbol
A=Rev.A, B=Rev.B

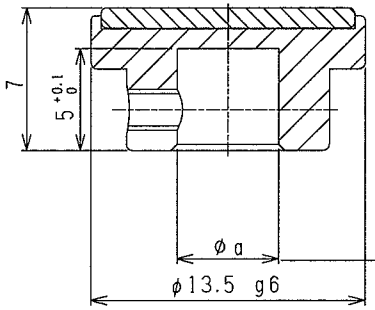

A-A

Model	φa
PSET011	φ5 +0.02/0
PSET012	φ4 +0.02/0

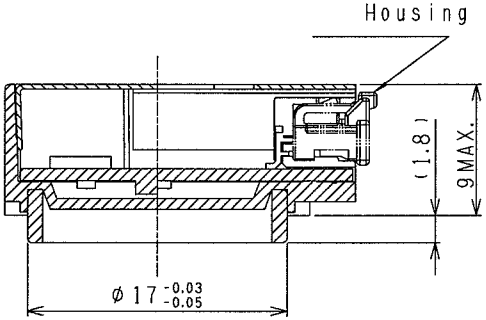

A-A

■Singanl Putout Connector Specification

A/Bch Output

PIN No.	Name	I/O	Content
1	VCC	-	Power Voltage
2	GND	-	GND
3	NC	IN	No Connection
4	A	OUT	Ach
5	OUT:0	OUT	Zch or OUT terminal0
6	OUT:1	OUT	Uch or OUT terminal1
7	B	OUT	Bch
8	OUT:2	OUT	Vch or OUT terminal2
9	OUT:3	OUT	Wch or OUT terminal3 or Error Output

Serial Communication Output

PIN No.	Name	I/O	Content
1	VCC	-	Power Voltage
2	GND	-	GND
3	REQ	IN	Request Signal
4	NC	OUT	No Connection
5	SPI_SDO	OUT	Communication Data
6	SPI_CLK	OUT	Communication Clock
7	NC	OUT	No Connection
8	OUT:2	OUT	Vch or OUT terminal2
9	OUT:3	OUT	Wch or OUT terminal3

■Connector Model No.
·Housing 501330-0900(MOLEX)
·Contact 501334-001 (MOLEX)
·Application Electric Wire Range
Conductor Size/AWG#32-28
Insalation Dia./φ0.4mm~0.8mm

EA05R01								
TYPE								
UNLESS OTHERWISE NOTED, C=								
No.PER UNIT	No.OF REQUIRED	SYM	No.OF REV.	DESCRIPTION	EC.No.	DATE	DESIGN	APPR

RELEASE OF DRAWING | SHEET

REF.DRAWING		PROJECT NO.	
PROJECTION	UNIT mm	SCALE FREE	TOLERANCE
SECTION		PRT	
APPR		CADCHK	
DESIGN	Dec.10.2009 S.Yasaki	CHECKD	

TITLE: OUTSIDE_DRAWING

DRAWING No. T09A664A01

ID No. 01/01

ABT110

日本電産サンキョー株式会社 NIDEC SANKYO CORPORATION

100A002CE01